All rights reserved. Specifications subject to change without notice.

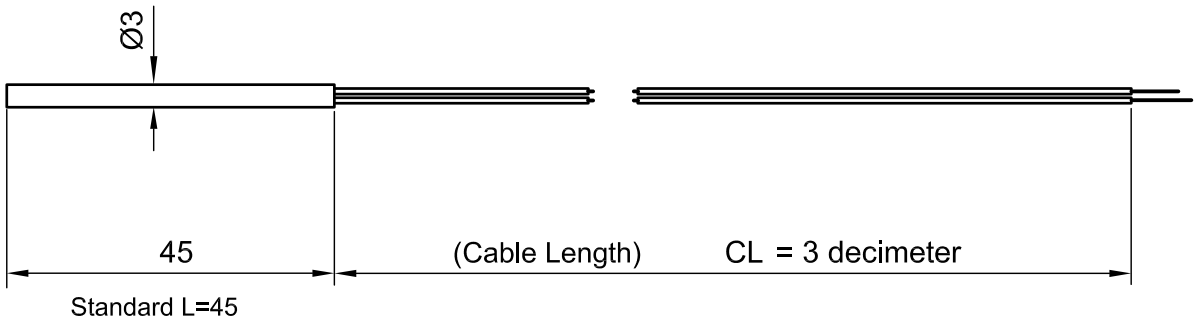

Material,sensor pipe : AISI 304
Protection grade : IP67
Weight : 2 gram

ORDERING EXAMPLE : MN3122 S45 U3
- Mechanical design
- Single element(Letter no.1)
- L=45 mm
- Element type Pt100(Letter no.2)
- Cable length (CL)=3 decimeter

LETTER NO.1	EXPLANATION
S	Single element, 2-wire

LETTER NO.2	ELEMENT TYPE	RANGE
M	Pt1000ohm/0 °C	-50 to 150 °C
U	Pt100 ohm/0 °C	-50 to 150 °C

S.tegn.MN-3123

Date	Dsgn/Dwn	Trac	Scale/Format
1989-03-16	AK/OL		1:1
Checked	Spec Ctrl.	Approved	
	0,75S		

Kongsberg Maritime AS
Automation
Trondheim

Repl. for | Repl. by | Next sheet

Dwg no. MN-3122 | Sh.no. | Rev. | Lang.

Temperature sensor MN3122----

DIMENSIONAL SKETCH

Rev. | Description | Date/Sign.

Rev. | Description | Date/Sign.

0449